Certyfikat Jakości
PN-EN ISO 9001:2001
Tel. (+48 071) 364-31-05
Fax (+48 071) 364-31-06
e-mail: gerpol@home.pl
www.gerpol.home.pl
NIP 899-00-24-244

GERPOL – Mokronos Dolny, ul. Parkowa 19, 55-080 Kąty Wrocławskie

hawle VAG Armatura Polska Sp. z o.o. AKWA GEORG FISCHER +GF+ Funke Gruppe Keulahütte Krauschwitz GmbH

# KSZTAŁTKI ŻELIWNE KOŁNIERZOWE DO WODY

**Kształtki wykonane są z żeliwa sferoidalnego 500-7 GGG50 zgodnie z normami: PN-92/H-83123, PN-90/H-74108, PN-90/H-74107.**

**Zabezpieczenie antykorozyjne zewnętrzne - farba bitumiczna posiadająca atest PZH.**

**Zabezpieczenie antykorozyjne wewnętrzne - powłoka cementowa posiadająca atest PZH.**

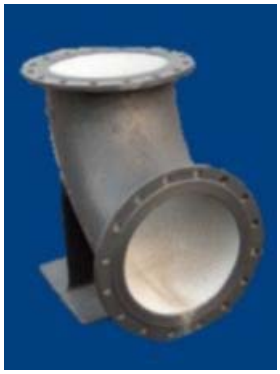

# *Trójniki kołnierzowe T*

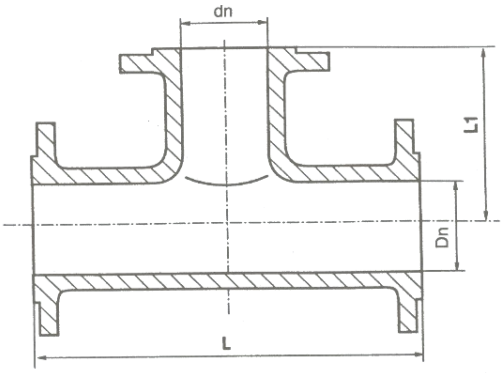


| Dn | dn | L (mm) | L1 (mm) |
|---|---|---|---|
| 80 | 50 | 310 | 145 |
| 80 | 80 | 330 | 165 |
| 100 | 50 | 320 | 155 |
| 100 | 80 | 330 | 175 |
| 100 | 100 | 360 | 180 |
| 150 | 80 | 360 | 200 |
| 150 | 100 | 380 | 205 |
| 150 | 150 | 440 | 220 |
| 200 | 80 | 380 | 225 |
| 200 | 100 | 400 | 230 |
| 200 | 150 | 460 | 240 |
| 200 | 200 | 520 | 260 |
| 250 | 80 | 400 | 260 |
| 250 | 100 | 420 | 265 |
| 250 | 150 | 470 | 270 |
| 250 | 200 | 520 | 280 |
| 250 | 250 | 570 | 290 |
| 300 | 80 | 425 | 295 |
| 300 | 100 | 450 | 300 |
| 300 | 150 | 505 | 310 |
| 300 | 200 | 565 | 320 |
| 300 | 250 | 620 | 330 |
| 300 | 300 | 680 | 340 |
| 350 | 350 | 760 | 380 |
| 400 | 80 | 470 | 355 |
| 400 | 100 | 490 | 360 |
| 400 | 150 | 550 | 370 |
| 400 | 200 | 615 | 385 |
| 400 | 250 | 665 | 390 |
| 400 | 300 | 730 | 400 |
| 400 | 400 | 840 | 420 |

| | | | |
|---|---|---|---|
| 500 | 80 | 515 | 420 |
| 500 | 100 | 535 | 420 |
| 500 | 150 | 645 | 405 |
| 500 | 200 | 650 | 440 |
| 500 | 250 | 710 | 450 |
| 500 | 300 | 770 | 460 |
| 500 | 400 | 890 | 480 |
| 500 | 500 | 1000 | 500 |
| 600 | 80 | 580 | 480 |
| 600 | 200 | 1100 | 500 |
| 600 | 300 | 1100 | 550 |
| 600 | 400 | 1100 | 550 |
| 600 | 500 | 1100 | 550 |
| 600 | 600 | 1100 | 550 |
| 800 | 200 | 690 | 585 |
| 800 | 400 | 915 | 615 |
| 800 | 500 | 1350 | 645 |
| 800 | 600 | 1350 | 645 |
| 800 | 800 | 1350 | 675 |
| 1000 | 400 | 990 | 735 |
| 1000 | 600 | 1650 | 765 |
| 1000 | 1000 | 1650 | 825 |
| 1200 | 1200 | 1950 | 975 |

## *Kolana kołnierzowe ze stopką N*

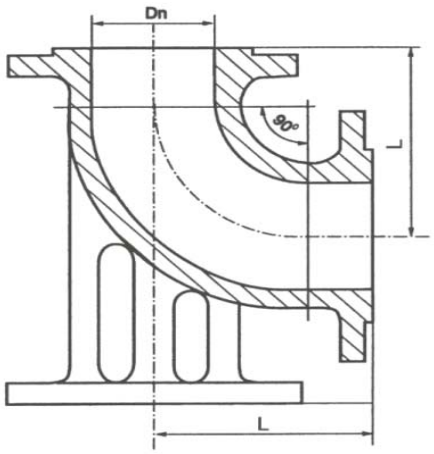


| Dn | L (mm) |
|---|---|
| 80 | 165 |
| 100 | 180 |
| 150 | 220 |
| 200 | 250 |
| 250 | 300 |
| 300 | 400 |
| 400 | 500 |
| 500 | 600 |
| 600 | 700 |
| 800 | 900 |

## *Kolana dwukołnierzowe Q*

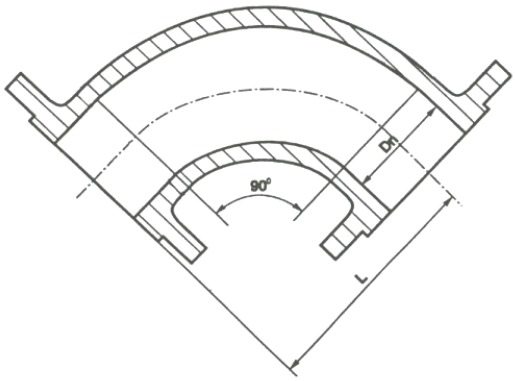


| Dn | L (mm) |
|---|---|
| 80 | 160 |
| 100 | 180 |
| 150 | 210 |
| 200 | 250 |
| 250 | 300 |
| 300 | 350 |
| 400 | 500 |
| 500 | 600 |
| 600 | 700 |
| 800 | 890 |
| 1000 | 1300 |
| 1200 | 1500 |

## *Króćce jednokołnierzowe F*

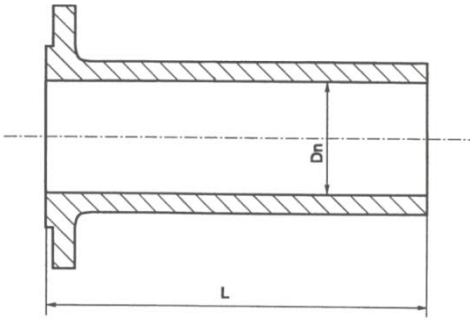


| Dn | L (mm) |
|---|---|
| 80 | 150, 250, 350 |
| 100 | 150, 250, 360 |
| 150 | 175, 250, 380 |
| 200 | 200, 250, 400 |
| 250 | 420, 500 |
| 300 | 440 |
| 400 | 480, 300 |
| 500 | 520 |
| 600 | 560 |
| 800 | 600 |
| 1000 | 600 |
| 1200 | 600 |

GERPOL®
joint venture

SYSTEMY Z PE, PP, PVC, PVDF,
KSZTAŁTKI I ARMATURA .
ŻELIWNA DO BUDOWY SIECI
GAZOWYCH, WODNYCH I PRZEMYSŁOWYCH

Certyfikat Jakości
PN-EN ISO 9001:2001
Tel. (+48 071) 364-31-05
Fax (+48 071) 364-31-06
e-mail: gerpol@home.pl
www.gerpol.home.pl
NIP 899-00-24-244

GERPOL – Mokronos Dolny, ul. Parkowa 19, 55-080 Kąty Wrocławskie

hawle VAG Armatura Polska Sp. z o.o. AKWA GEORG FISCHER +GF+ Funke Gruppe Keulahütte Krauschwitz GmbH

# *Łuki dwukołnierzowe*
# *FFK 45°, 30°, 22°, 11°*

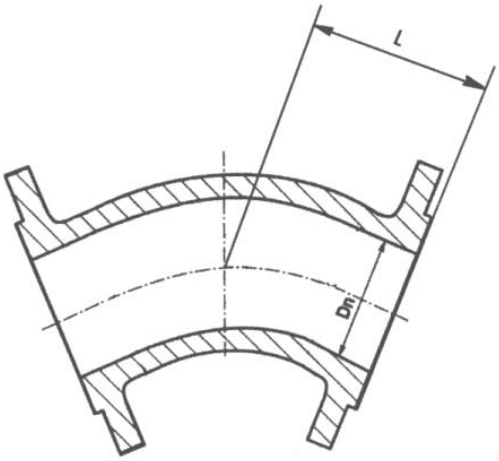


| Dn | L (mm) |
|---|---|
| 80 (11°) | 70 |
| 80 (22°) | 90 |
| 80 (30°) | 100 |
| 80 (45°) | 110 |
| 100 (11°) | 65 |
| 100 (22°) | 75 |
| 100 (30°) | 85 |
| 100 (45°) | 100 |
| 150 (11°) | 80 |
| 150 (22°) | 90 |
| 150 (30°) | 100 |
| 150 (45°) | 125 |
| 200 (11°) | 40 |
| 200 (22°) | 105 |
| 200 (30°) | 120 |
| 200 (45°) | 145 |
| 250 (11°) | 50 |
| 250 (22°) | 95 |
| 250 (30°) | 140 |
| 250 (45°) | 150 |
| 300 (11°) | 90 |
| 300 (22°) | 125 |
| 300 (30°) | 150 |
| 300 (45°) | 180 |
| 400 (11°) | 125 |
| 400 (45°) | 220 |
| 500 (22°) | 180 |
| 500 (30°) | 200 |
| 500 (45°) | 250 |
| 600 (22°) | 190 |
| 600 (30°) | 220 |
| 600 (45°) | 290 |
| 800 (11°) | 260 |
| 800 (22°) | 305 |
| 800 (30°) | 345 |
| 800 (45°) | 450 |
| 1000 (11°) | 632 |
| 1000 (22°) | 632 |
| 1000 (30°) | 632 |
| 1000 (45°) | 632 |

## *Czwórniki kołnierzowe TT*

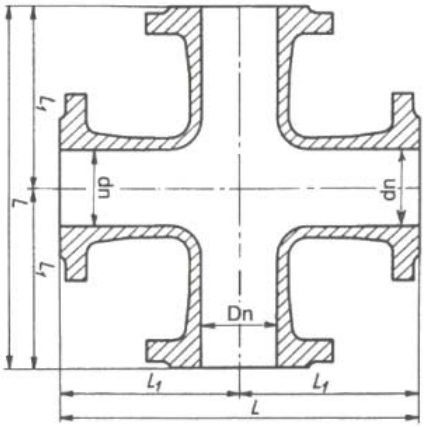


| Dn | dn | L (mm) | L1 (mm) |
|---|---|---|---|
| 100 | 100 | 320 | 160 |
| 150 | 150 | 400 | 200 |
| 200 | 200 | 450 | 225 |
| 250 | 250 | 600 | 300 |
| 300 | 300 | 680 | 340 |
| 400 | 400 | 900 | 450 |
| 500 | 500 | 900 | 450 |
| 600 | 600 | 1100 | 550 |

## *Kołnierze ślepe X*

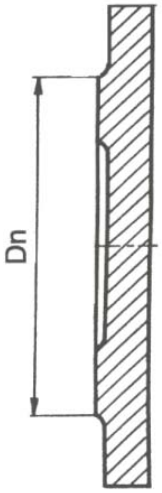


| Dn |
|---|
| 80 |
| 100 |
| 150 |
| 200 |
| 250 |
| 300 |
| 400 |
| 500 |
| 600 |
| 800 |
| 1000 |
| 1200 |

## *Zwężki dwukołnierzowe FFR*

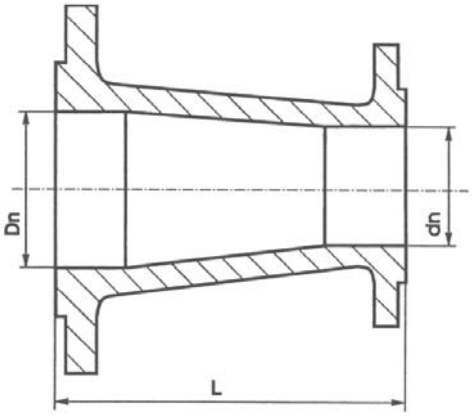


| Dn | dn | L (mm) |
|---|---|---|
| 80 | 50 | 120 |
| 80 | 65 | 110 |
| 100 | 50 | 150 |
| 100 | 80 | 120 |
| 150 | 80 | 160 |
| 150 | 100 | 160 |
| 200 | 80 | 200 |
| 200 | 100 | 200 |
| 200 | 150 | 150 |
| 250 | 100 | 250 |
| 250 | 150 | 200 |
| 250 | 200 | 160 |
| 300 | 150 | 250 |
| 300 | 200 | 200 |
| 300 | 250 | 160 |
| 400 | 150 | 350 |
| 400 | 200 | 300 |
| 400 | 250 | 260 |
| 400 | 300 | 200 |
| 400 | 350 | 160 |
| 500 | 400 | 200 |
| 600 | 400 | 300 |
| 600 | 500 | 200 |
| 800 | 600 | 300 |
| 1000 | 800 | 700 |
| 1200 | 1000 | 790 |

## *Zwężki kołnierzowe asymetryczne FFRE*

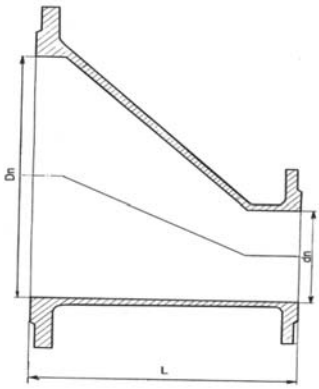


| Dn | dn | L (mm) |
|---|---|---|
| 300 | 150 | 300 |
| 400 | 150 | 350 |
| 500 | 150 | 400 |
| 600 | 200 | 450 |

Certyfikat Jakości
PN-EN ISO 9001:2001
Tel. (+48 071) 364-31-05
Fax (+48 071) 364-31-06
e-mail: gerpol@home.pl
www.gerpol.home.pl
NIP 899-00-24-244

G E R P O L – Mokronos Dolny, ul. Parkowa 19, 55-080 Kąty Wrocławskie

hawle VAG Armatura Polska Sp. z o.o. AKWA GEORG FISCHER +GF+ Funke Gruppe Keulahütte Krauschwitz GmbH

# *Króćce dwukołnierzowe FF*

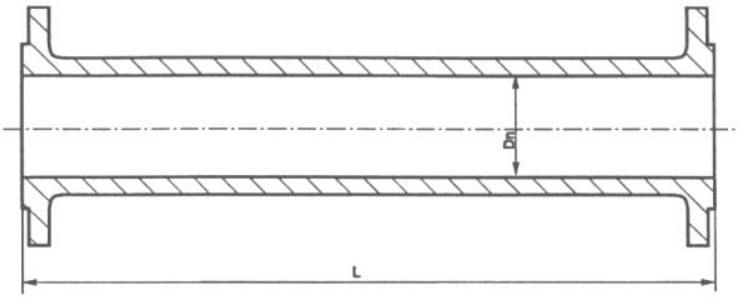


| Dn | L (mm) |
|---|---|
| 50 | 300<br>500 |
| 80 | 100<br>200<br>300<br>400<br>500<br>1000<br>2000<br>3000 |
| 100 | 100<br>200<br>300<br>400<br>500<br>1000<br>2000 |

| | |
|---|---|
| | 3000<br>4000 |
| 150 | 100<br>200<br>300<br>400<br>500<br>1000<br>2000<br>3000<br>4000 |
| 200 | 100<br>200<br>300<br>400<br>500<br>1000<br>2000<br>3000 |

| | |
|---|---|
| 250 | 500<br>1000<br>2000<br>3000 |
| 300 | 500<br>1000<br>2000<br>3000 |
| 400 | 500<br>1000<br>2000<br>3000 |
| 500 | 1000<br>2000<br>3000 |
| 600 | 500<br>1000<br>2000<br>3000 |
| 800 | 500<br>1000<br>2000<br>3000 |
| 1000 | 500<br>1000<br>2000 |

| | |
|---|---|
| | **3000** |
| **1200** | **1000** |